THIS MAP IS FOR THE PURPOSE OF AD VALOREM TAXATION ONLY.

# Ptn. Tract No. 14782, M.B. 274/52-56

Bear Valley Unified
Tax Rate Area
57004

0315 - 48

1"=200'

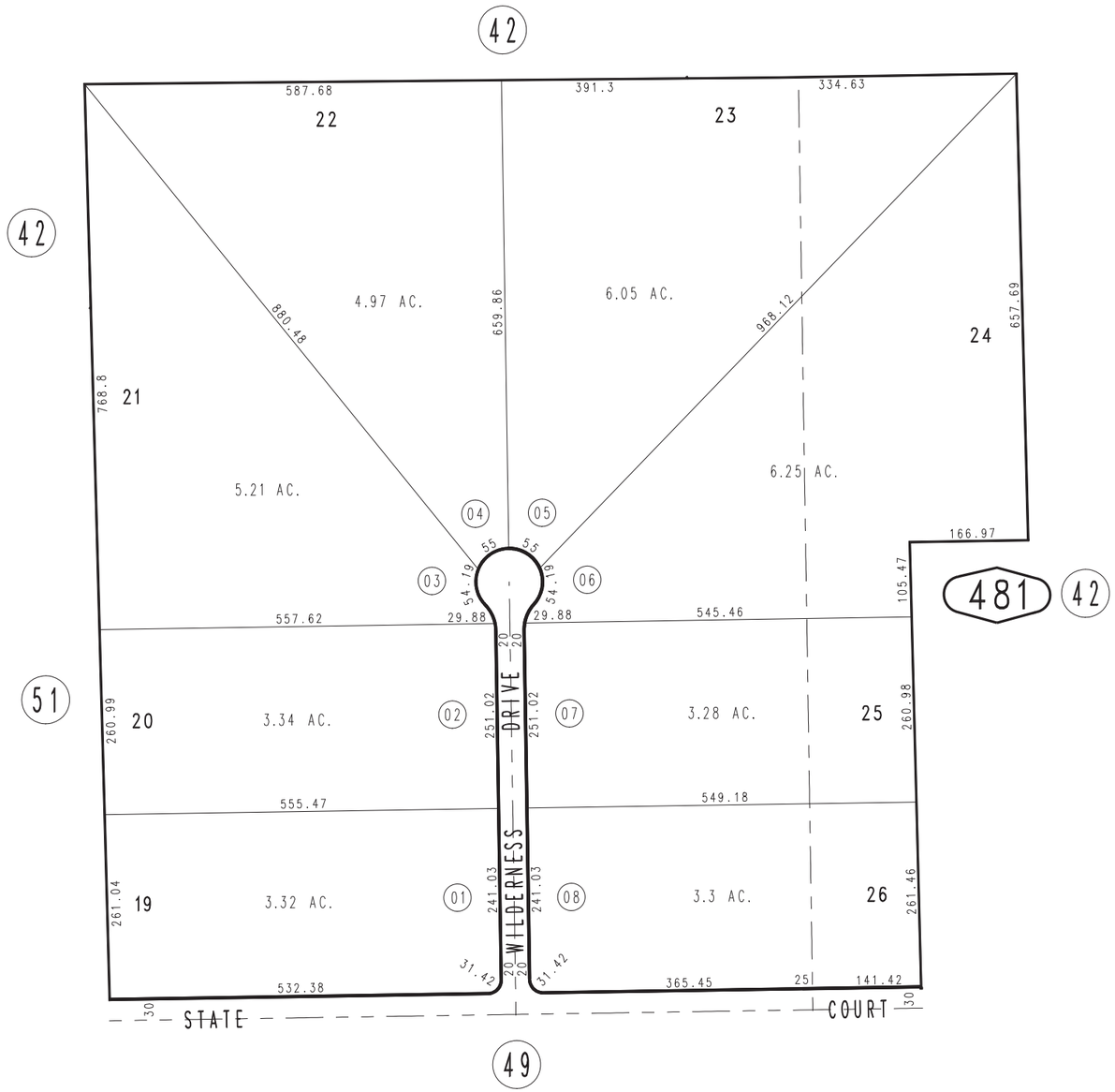


REVISED

November 2004

Ptn. S.1/2, Sec.19,
T.2N.,R.2E.

Assessor's Map
Book 0315 Page 48
San Bernardino County