THIS MAP IS FOR THE PURPOSE OF AD VALOREM TAXATION ONLY.

N.1/2, Sec.22, T.2N.,R.2E., S.B.B.&M.

Bear Valley Unified Sch. Dist. 0315 - 26
Tax Rate Area
57004 57006

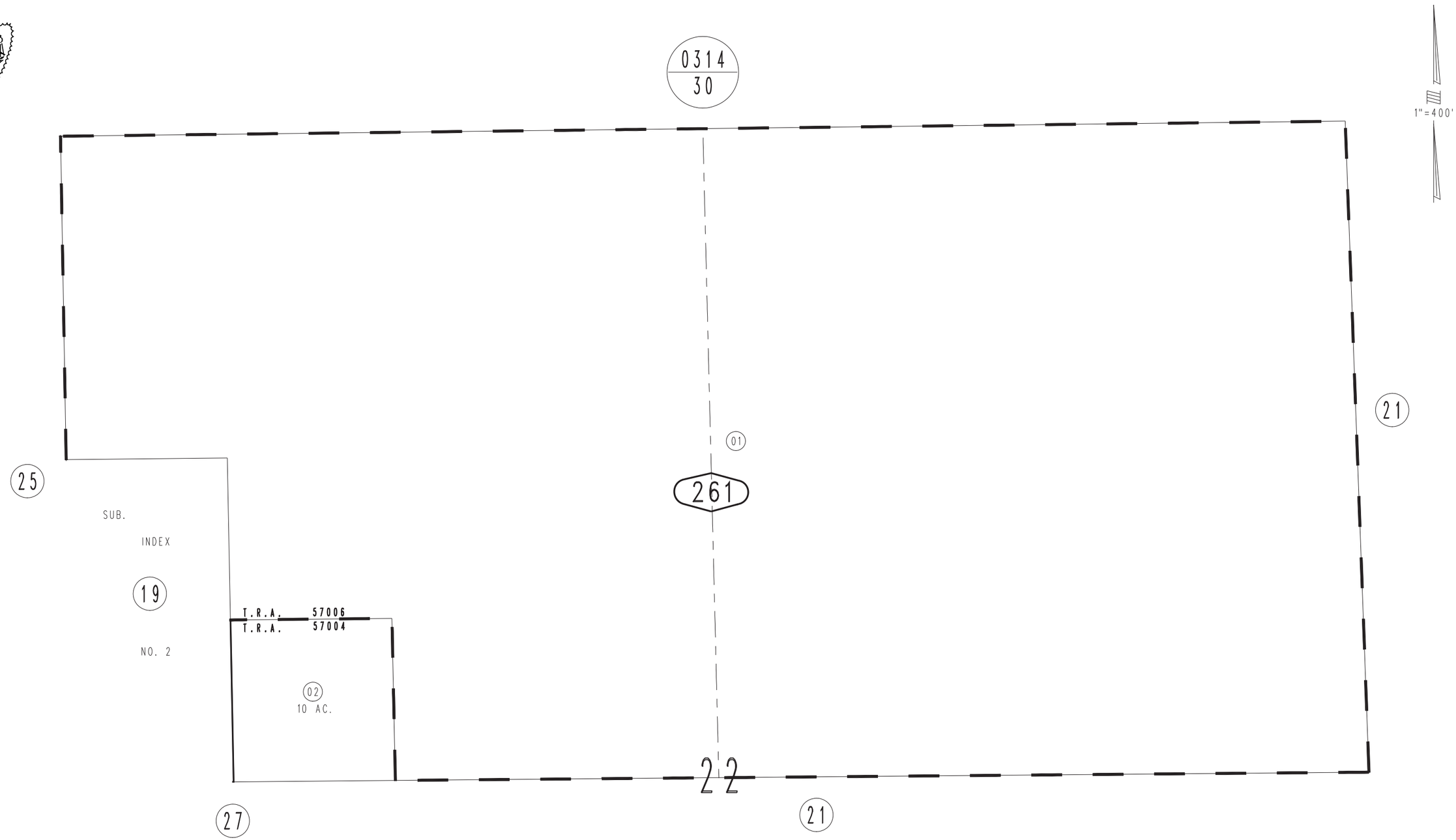

REVISED
03/15/16 KC-MC

Assessor's Map
Book 0315 Page 26
San Bernardino County

November 2004