THIS MAP IS FOR THE PURPOSE OF AD VALOREM TAXATION ONLY.

S.1/2, Fractional Sec.1, T.1N.,R.2E., S.B.B.&M.

Bear Valley U.S.D.
Tax Rate Area
57059

0305- 19

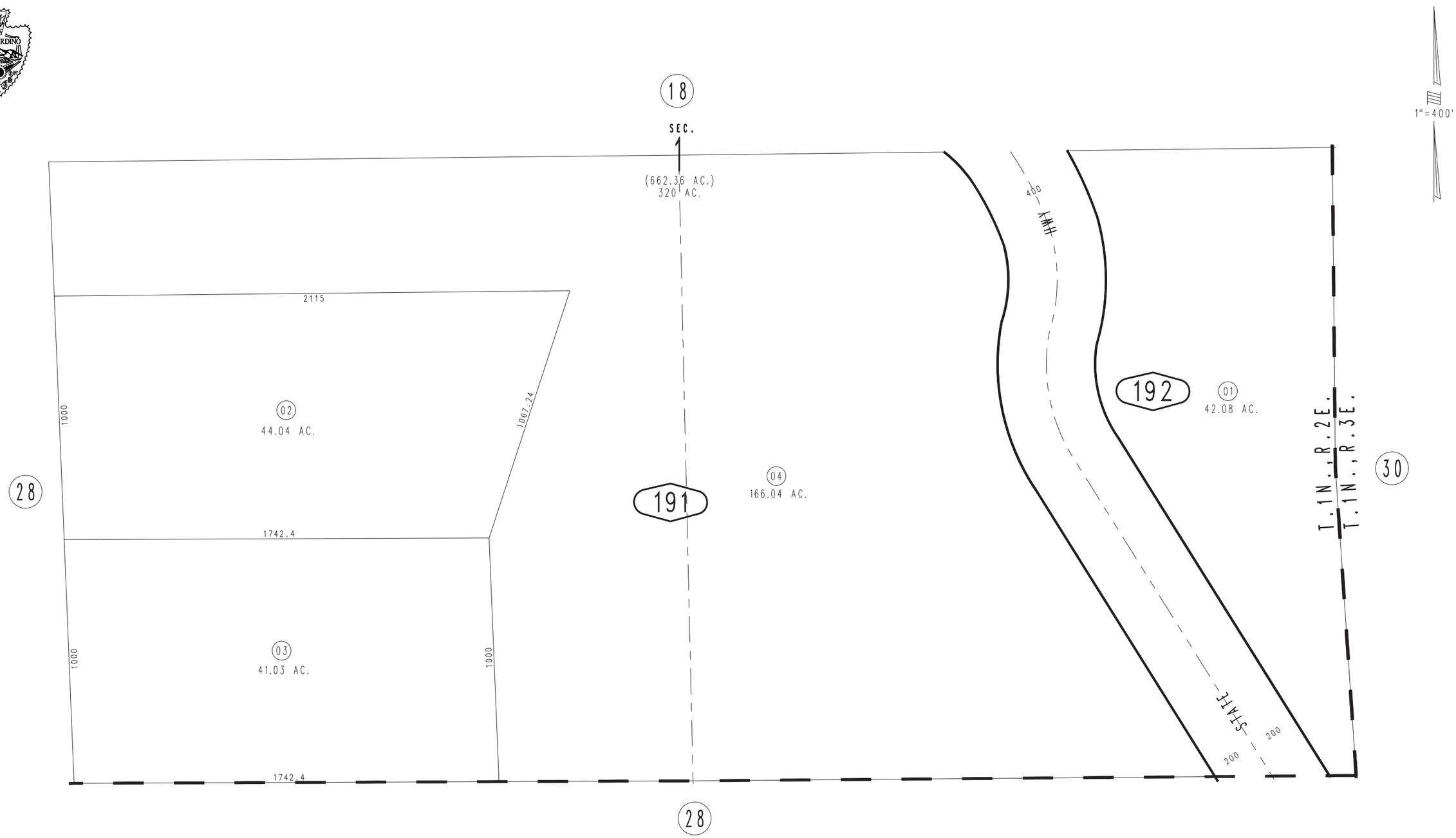

REVISED

Assessor's Map
Book 0305 Page 19
San Bernardino County

January 2005