THIS MAP IS FOR THE PURPOSE OF AD VALOREM TAXATION ONLY.

Ptn. Tract No. 18027, M.B. 354/92-95

City of Ontario
Tax Rate Area
4090

0218 - 03

1" = 100'

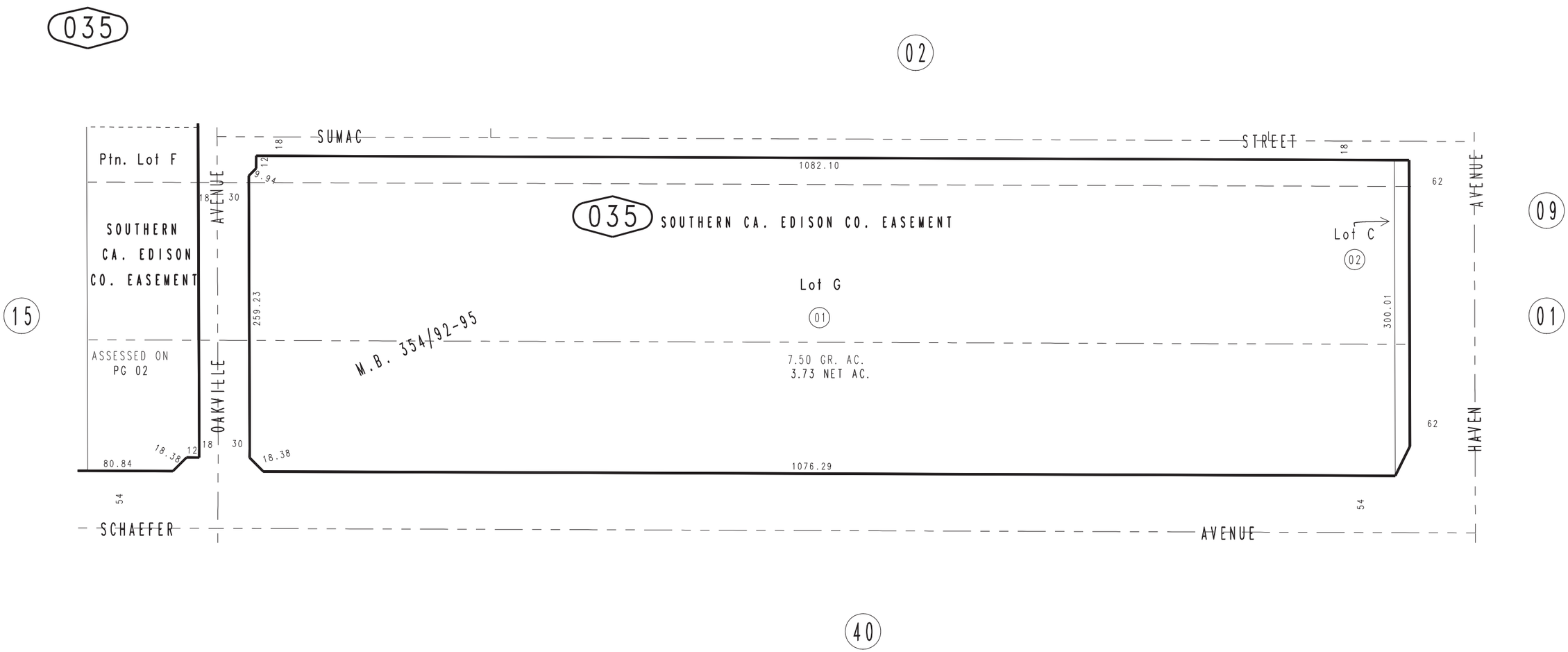

REVISED
01/22/21 GW
07/14/21 RU

October 2020 GW

Ptn. S.E.1/4, Sec. 11
T.2S., R.7W.

Assessor's Map
Book 0218 Page 03
San Bernardino County