THIS MAP IS FOR THE PURPOSE OF AD VALOREM TAXATION ONLY.

Ptn. Tract No.9868-1, M.B. 150/85-87

City of Redlands
Tax Rate Area
5000

0170 - 46

1" = 100'

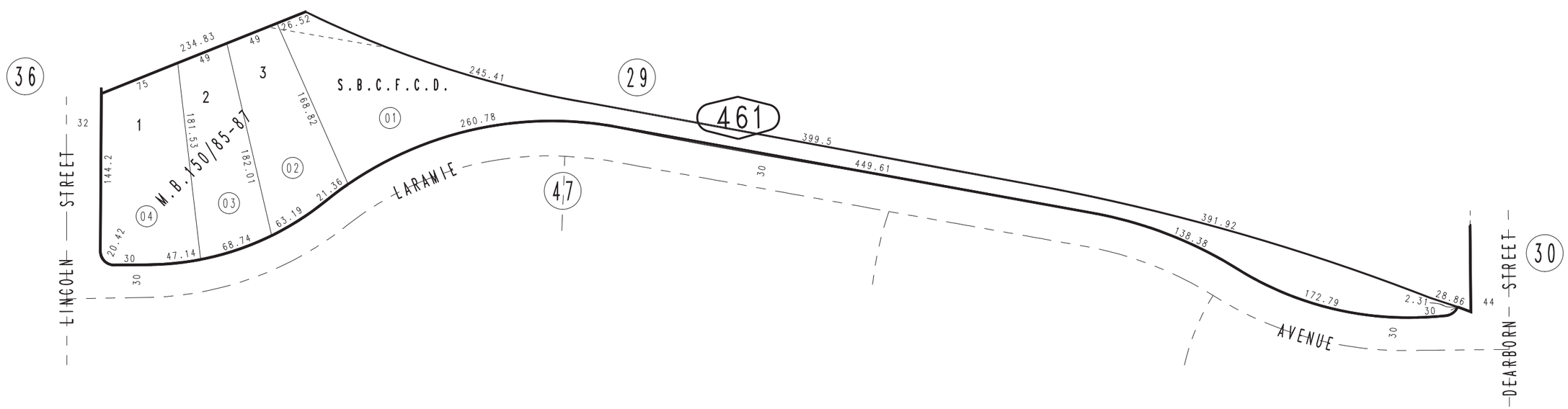

REVISED
12/29/09 LH

November 2003

Ptn. N.W.1/4, Sec. 25
T.1S., R.3W.

Assessor's Map
Book 0170 Page 46
San Bernardino County