THIS MAP IS FOR THE PURPOSE OF AD VALOREM TAXATION ONLY.

Ptn. Rancho San Bernardino, M.B. 7/2

City of Colton
Tax Rate Area
2008,2011,2040

0163 - 38

1"=400'

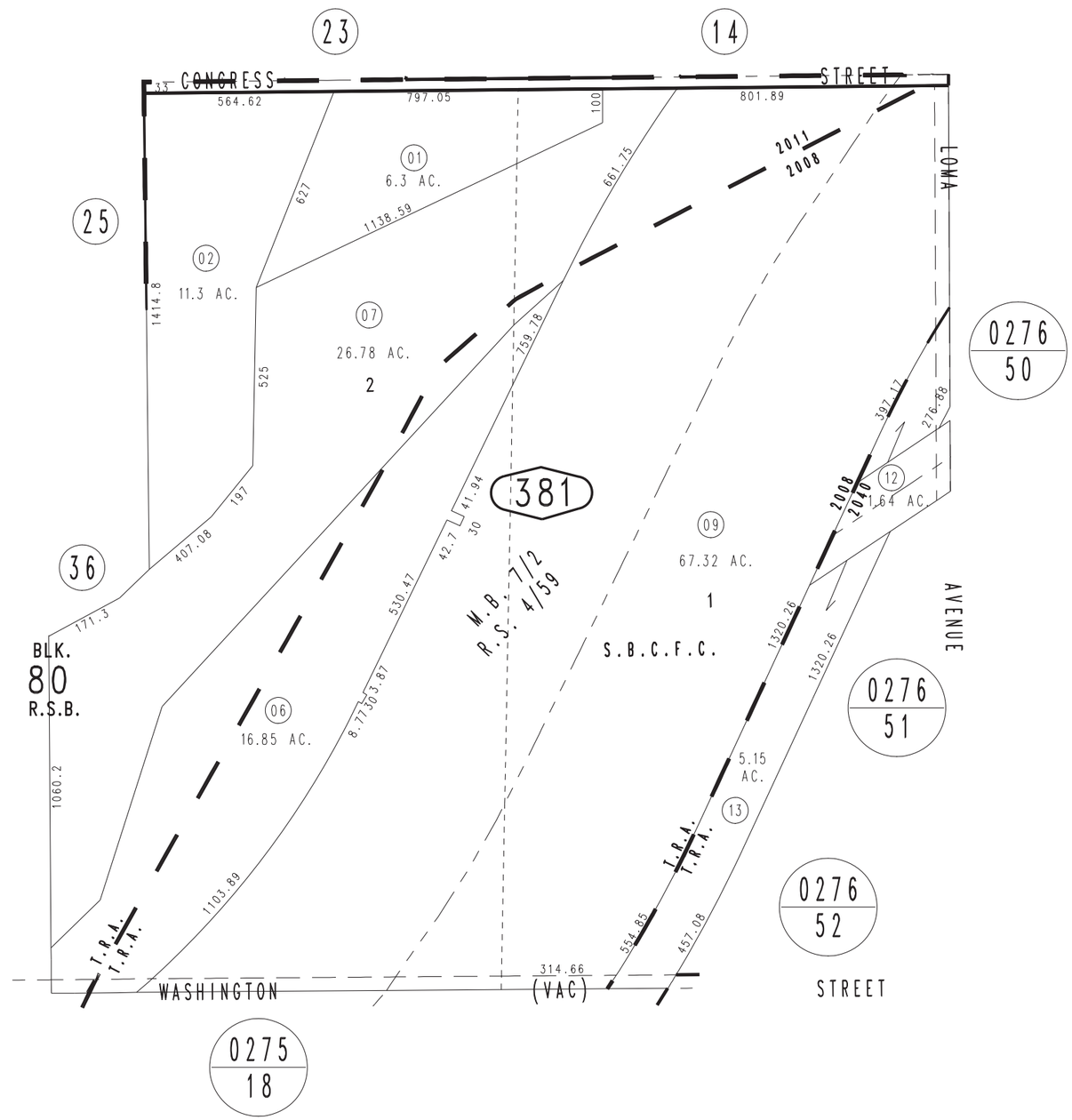

REVISED
09/08/09 RU

December 2003

Ptn. E. 1/2, Sec. 29
T.1S., R.4W.

Assessor's Map
Book 0163 Page 38
San Bernardino County