THIS MAP IS FOR THE PURPOSE OF AD VALOREM TAXATION ONLY.

INDEX MAP
BOOK 0477
CITY OF VICTORVILLE

1"=500'

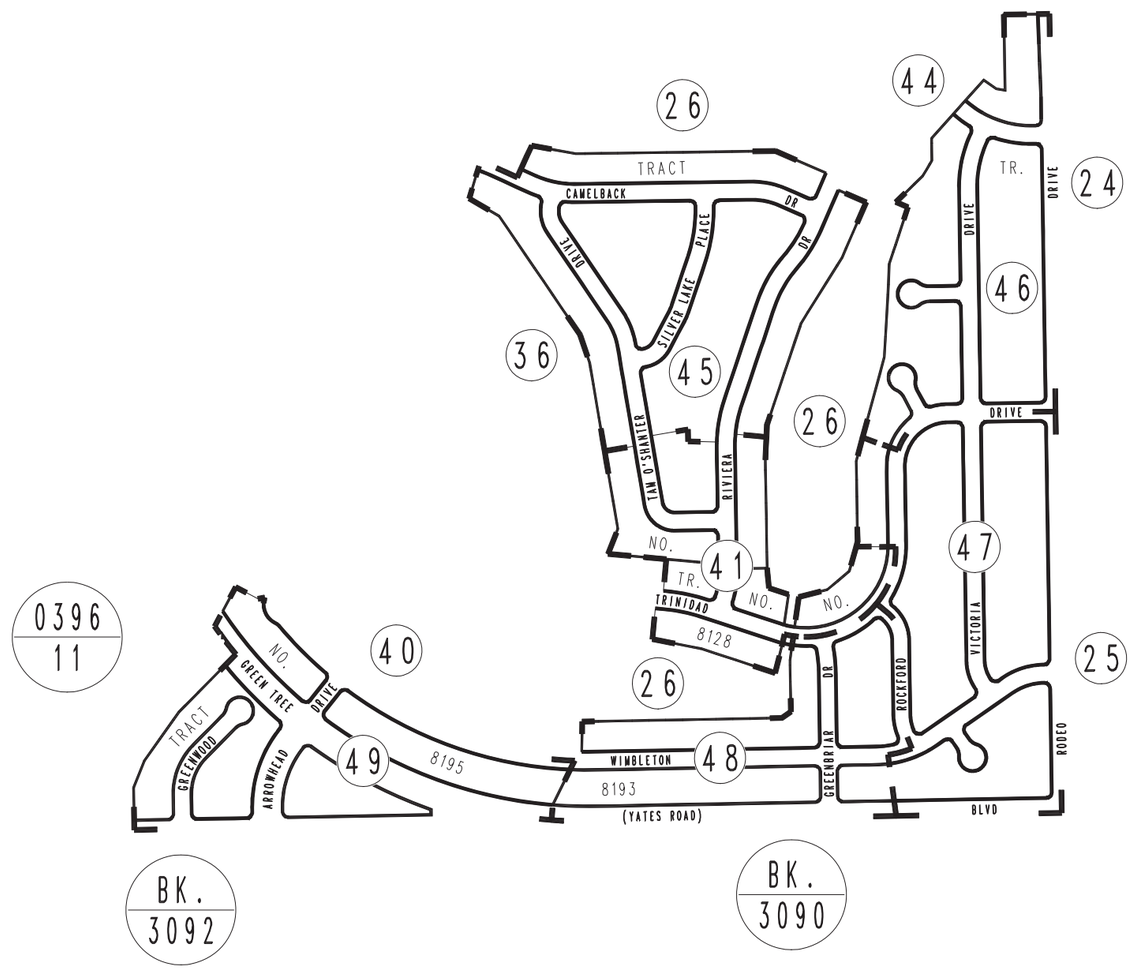

REVISED

Assessor's Index Map
Book 0477
San Bernardino County

June 2004