THIS MAP IS FOR THE PURPOSE OF AD VALOREM TAXATION ONLY.

INDEX MAP
BOOK 0422
Barstow Unified

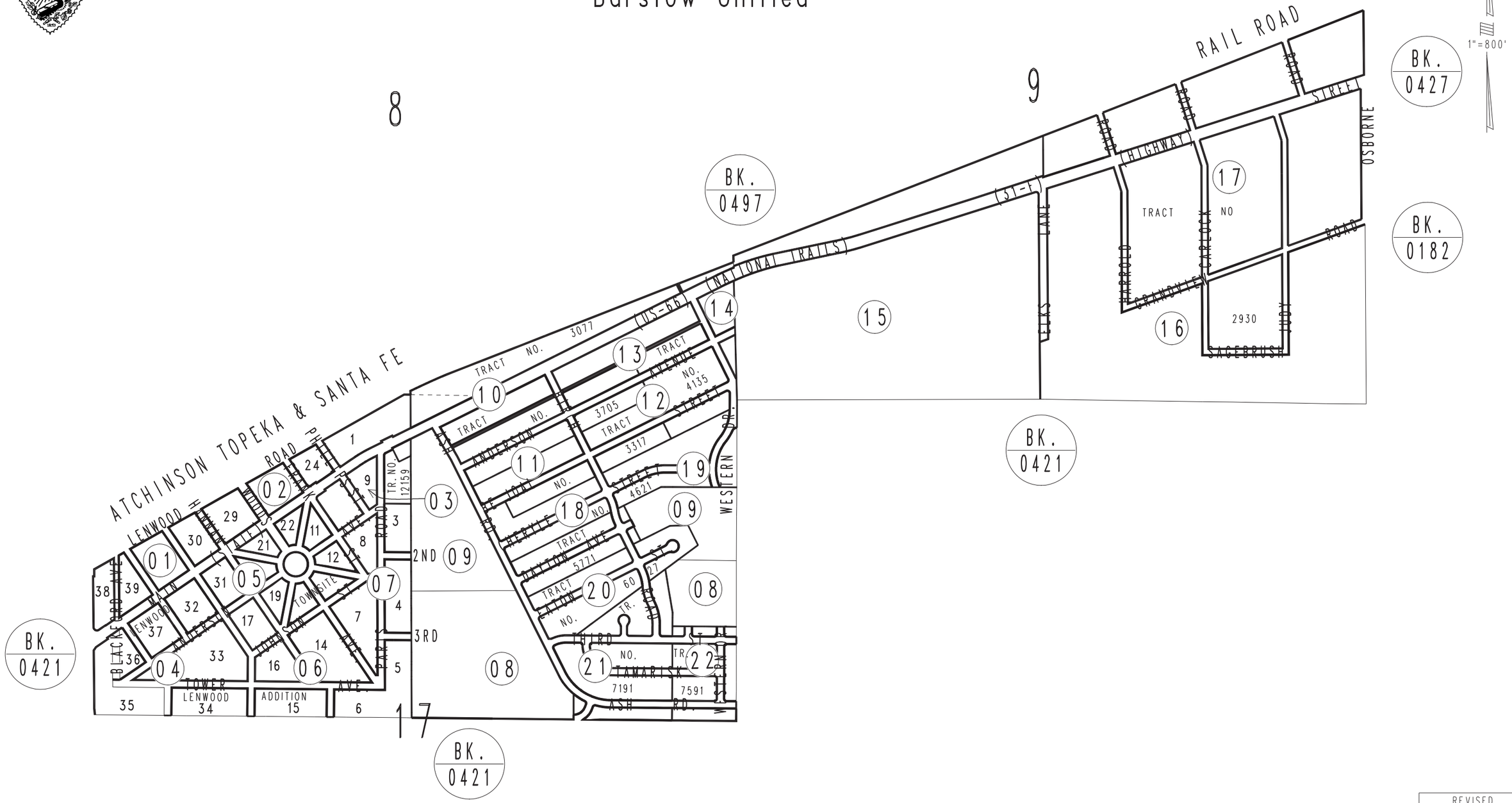

October 2003

Assessor's Index Map
Book 0422
San Bernardino County

REVISED