THIS MAP IS FOR THE PURPOSE OF AD VALOREM TAXATION ONLY.

INDEX MAP
BOOK 0324
YUCAIPA JOINT UNIFIED

1" = 1200'

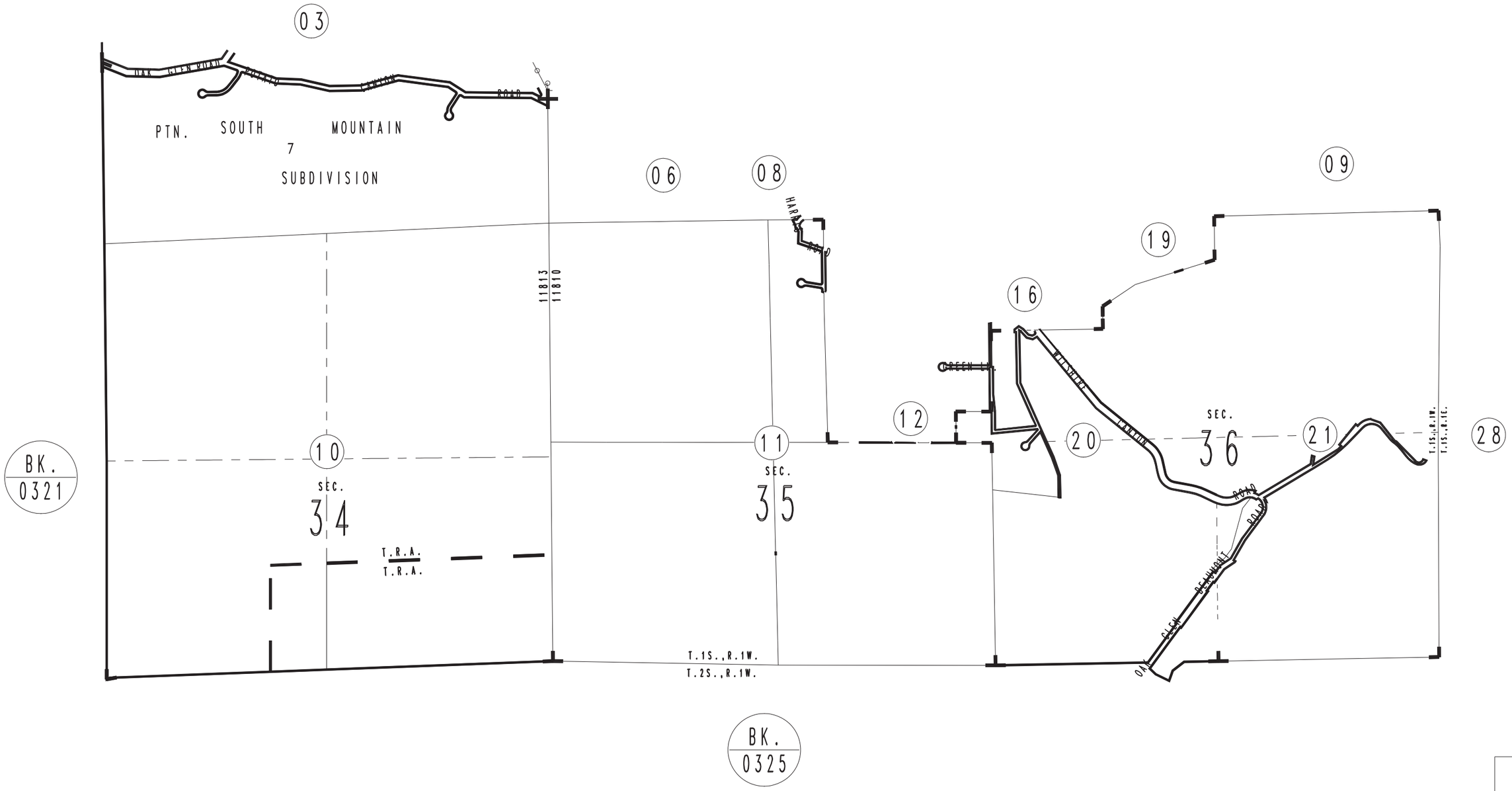

REVISED

Assessor's Index Map
Book 0324
San Bernardino County

March 2005