THIS MAP IS FOR THE PURPOSE OF AD VALOREM TAXATION ONLY.

INDEX MAP
BOOK 0295
RIM OF THE WORLD UNIFIED

1"=500'

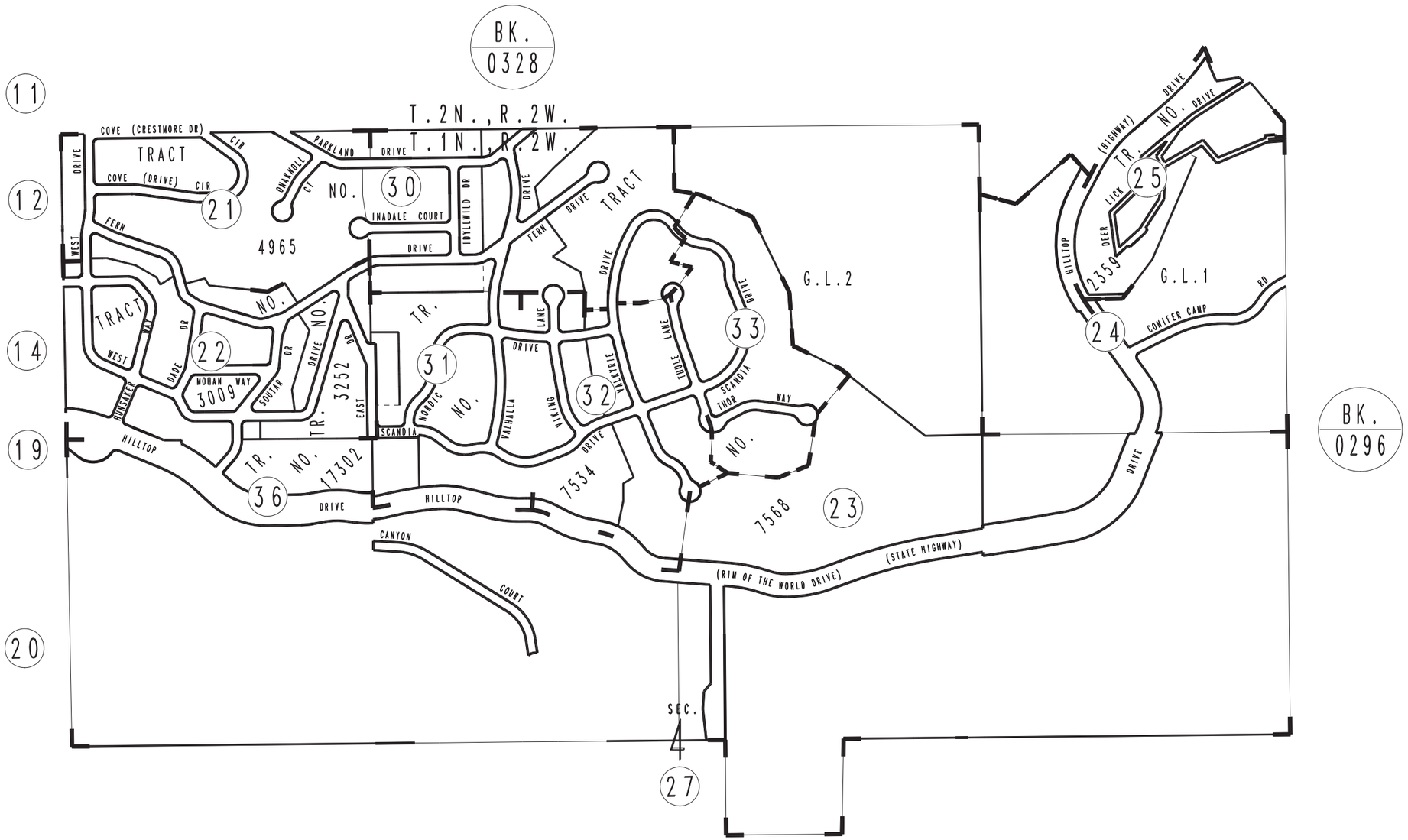

REVISED
11/26/13 RM

Assessor's Index Map
Book 0295
San Bernardino County

April 2005