THIS MAP IS FOR THE PURPOSE OF AD VALOREM TAXATION ONLY.

INDEX MAP
BOOK 0265
CITY OF SAN BERNARDINO

1"=500'

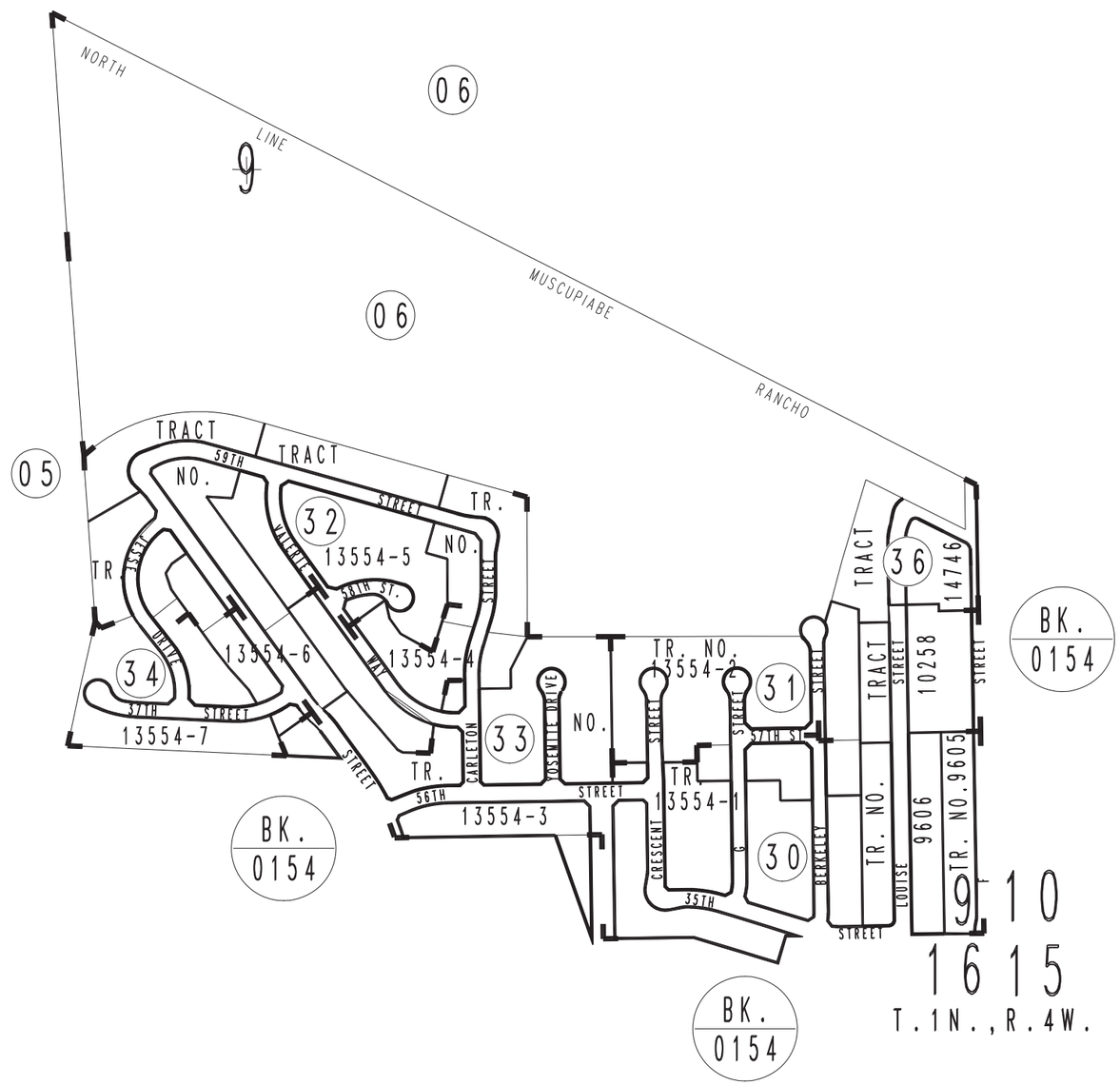

REVISED

Assessor's Index Map
Book 0265
San Bernardino County

January 2005